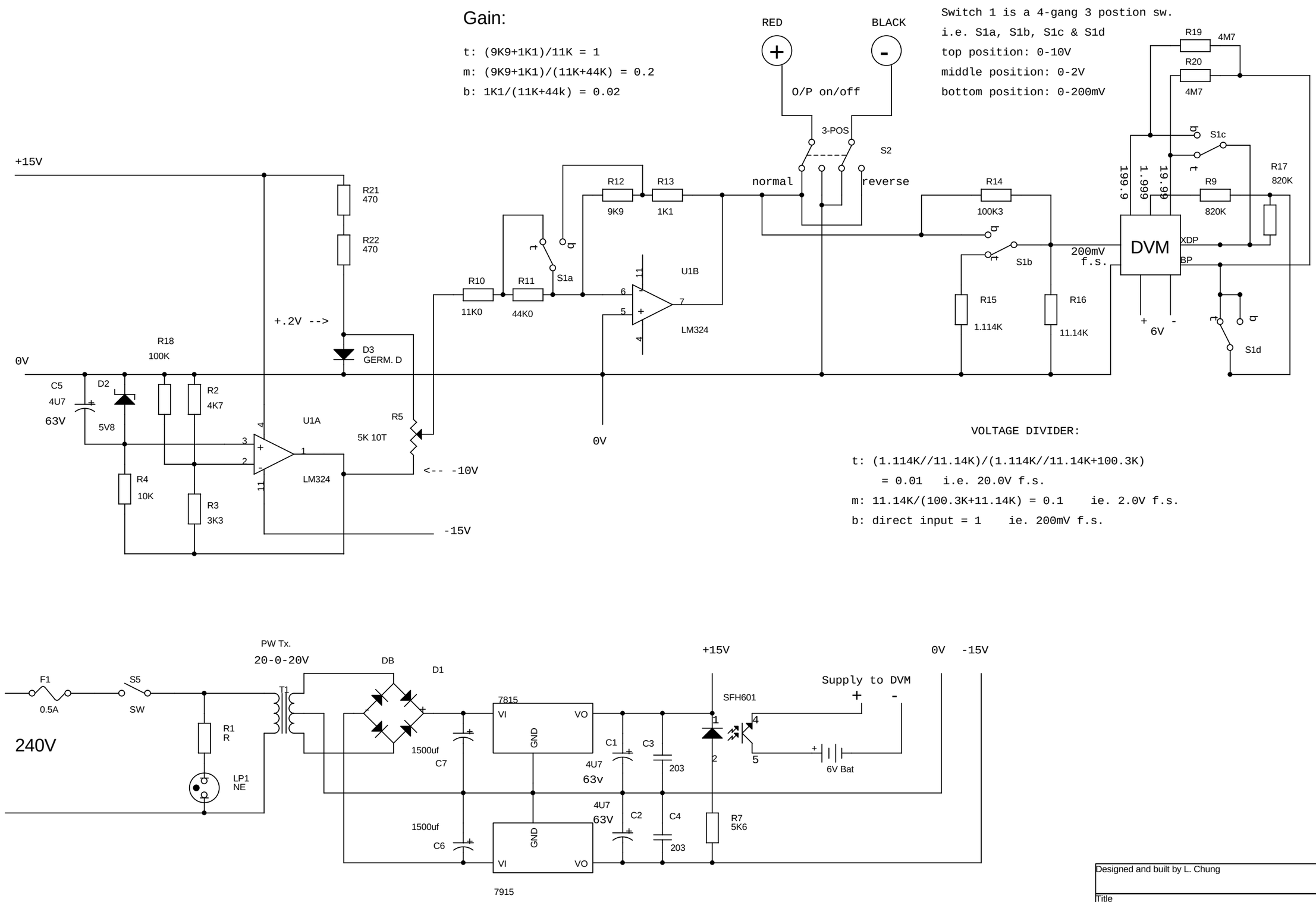

Designed and built by L. Chung		
Title CALIBRATION VOLTAGE SOURCE		
Size B	Document Number Filename: CALIB.SCH	Rev 0
Date: Friday, April 16, 2004	Sheet 1 of 1	